since 1973

Series KST

Safety & Relief Valve

KSM

Korea Special Metal CO., LTD

ISO 9001 : 2008
ISO 14001 : 2004

History

Korea Special Metal CO., LTD

1970

Jun. 1973 Established Korea Metal Co. (Sindaebang-Dong, Seoul
Oct. 1974 Manufactured the Valve for Boiler
May. 1977 Expanded factory and moved (Sihung-Dong, Seoul)
Jul. 1977 Established Korea Valve Industry
Dec. 1977 Type Approval for Safety Valve (Energy Control Corp. 1-2002-28-30)
Apr. 1979 Type Approval for Cast Steel Safety Valve (Energy Control Corp. 1-2002-124-127)
May. 1979 Manufactured the Level Gauge for High Pressure for Boiler or Vessel
Jun. 1979 Manufactured the Casting Steel Valves
Aug. 1979 Expanded factory and moved (Sihung-gun, Gyounggi-Do)

1980

Jan. 1984 Acquired KS mark for Angle Valve 10K (KS B 2350)
Jul. 1985 Manufactured the Safety Valve for Gas
Feb. 1988 Established Korea Special Metal Co., Ltd.
Aug. 1988 Acquired KS mark for Ball Valve 10K (KS B 2308)

1990

Jul. 1995 Expanded factory and moved (Namdong Industrial Complex, Incheon)
Oct. 1997 Acquired KS mark for Ball Valve 20K (KS B 2308)
Dec. 1997 Approved Certificate of ISO 9001:1994
Dec. 1998 Acquired KS mark for Gate & Globe Valve 10K, 20K (KS B 2361)
Aug. 1999 Approved Certificate of API 6D

2000

Nov. 2003 Approved Certificate of ISO 9001:2000
Nov. 2004 Established Hebei Korea Valve Co., Ltd. In CHINA (Agency)
Jul. 2006 Acquired Special Equipment People°Øs Republic of China for Safety Valve
Aug. 2008 Trademark Registration for KSM mark, No. 40-0755935
(The Korean Intellectual Property Office)
Sep. 2008 Approved Certificate of ISO 14001:2004
Jun. 2009 Acquired [Clean Business Certification], No. 53,763
Jul. 2009 Acquired Safety Certification for KOSHA
Dec. 2009 Approved Certificate of ISO 9001:2008

2010

May. 2011 Acquired INNO-BIZ Certificate
Jan. 2012 Acquired Company Affiliated R & D Institutes Certificate
Sep. 2012 SeoYeong University Family Company Cooperation Agreement **Signed**
Sep. 2012 Chjeonghak Technical High School Educational-Industrial Cooperation Agreement Signed
Dec. 2012 Recognized to Visionary Enterprise (Certificate of Recognition, Incheon Metropolitan City)
Nov. 2013 Consortium for HRD Ability Magnified Program(CHAMP) Cooperation Agreement
(Heman Resources Development Service of Korea)
Jan. 2014 Recognized to GANGSO Enterprise (Ministry of Employment and Labor)
May. 2014 Apprenticeship System Signed Agreement
(Heman Resources Development Service of Korea)

Contents

Numbering System

KST Series - Screw type, Low lift type

Selecting and specifying KSM Safety & Relief Valves is simple using the numbering system that follows. Each digit of the part number has a distinct significance. The digits describe the basic valve series, valve type, inlet / outlet type and connection type.

MODEL	TYPE	LEVER	USE CONDITION
KST-11	Conventional	No	Steam, Air & Gas, Vapor, Water & Liquid
KST-12	Conventional	Yes	Steam, Air & Gas, Vapor

OPTION : Test gag

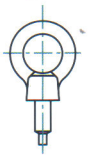

K S T - 11 , 15A M . PT × 20A F . PT

COMPANY CODE
K : Korea Special Metal

VALVE NAME
S : Safety & Relief Valve

CONNECTION TYPE
T : Screw type

VALVE TYPE
11 : No Lever
12 : Lever

INLET SIZE
15A, 20A, 25A, 32A, 40A, 50A

INLET SCREW CONNECTION
M : Male
F : Female

INLET CONNECTION
PT : Pipe Taper Thread
NPT : National Pipe Taper Thread

OUTLET SIZE
20A, 25A, 32A, 40A, 50A

OUTLET SCREW CONNECTION
M : Male
F : Female

OUTLET CONNECTION
PT : Pipe Taper Thread
NPT : National Pipe Taper Thread

Bill of Materials

KSM
Korea Special Metal CO., LTD

SERIES KST-11 SIZE 15A/20A/32A

This valves are small, compact and high performance valves widely used for small boiler, thermal expansion and the petrochemical industry as well as chemical and general industries and cover the wide pressure range, from low to high, of steam, air and gas, vapor, water and liquid.

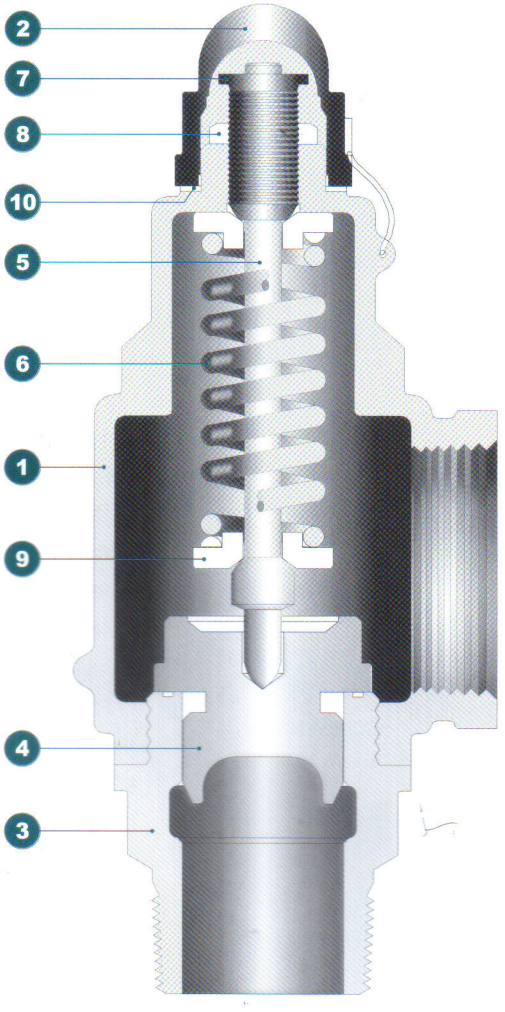

NO	Part Name	Standard Material
1	BODY	BRONZE CAST STEEL STAINLESS STEEL
2	CAP	BRONZE CAST STEEL STAINLESS STEEL
3	SEAT	BRONZE STAINLESS STEEL
4	DISC	BRASS STAINLESS STEEL
5	SPINDLE	BRASS CARBON STEEL STAINLESS STEEL
6	SPRING	CARBON STEEL STAINLESS STEEL
7	ADJUSTING SCREW	BRASS CARBON STEEL STAINLESS STEEL
8	ADJUSTING SCREW NUT	BRASS CARBON STEEL STAINLESS STEEL
9	SPRING GUIDE	BRASS CARBON STEEL STAINLESS STEEL
10	GASKET	NON-ASBESTOS PTFE GRAPHITE

Bill of Materials

SERIES KST-11 SIZE 40A/50A

This valves are small, compact and high performance valves widely used for small boiler, thermal expansion and the petrochemical industry as well as chemical and general industries and cover the wide pressure range, from low to high, of steam, air and gas, vapor, water and liquid.

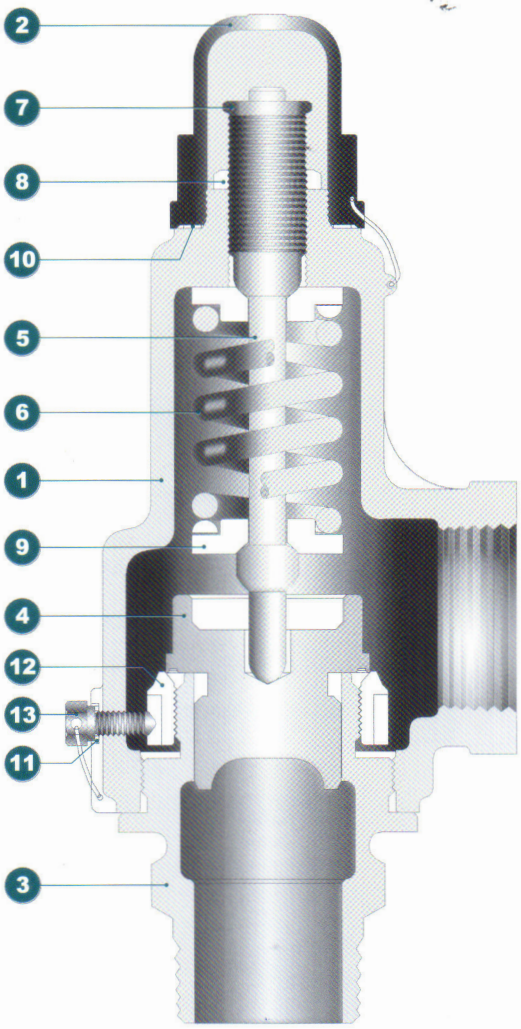

NO	Part Name	Standard Material
1	BODY	DUCTILE CAST STEEL STAINLESS STEEL
2	CAP	BRONZE CAST STEEL STAINLESS STEEL
3	SEAT	BRONZE STAINLESS STEEL
4	DISC	BRASS STAINLESS STEEL
5	SPINDLE	CARBON STEEL STAINLESS STEEL
6	SPRING	CARBON STEEL STAINLESS STEEL
7	ADJUSTING SCREW	BRASS CARBON STEEL STAINLESS STEEL
8	ADJUSTING SCREW NUT	BRASS CARBON STEEL STAINLESS STEEL
9	SPRING GUIDE	BRASS CARBON STEEL STAINLESS STEEL
10	GASKET	NON-ASBESTOS PTFE GRAPHITE
11	GASKET	NON-ASBESTOS PTFE GRAPHITE
12	BLOW DOWN RING	BRASS STAINLESS STEEL
13	LOCK BOLT	BRASS CARBON STEEL STAINLESS STEEL

Bill of Materials

KSM
Korea Special Metal CO., LTD

SERIES KST-12 SIZE 15A/20A/32A

This valves are small, compact and high performance valves widely used for small boiler, thermal expansion and the petrochemical industry as well as chemical and general industries and cover the wide pressure range, from low to high, of steam, air and gas, vapor.

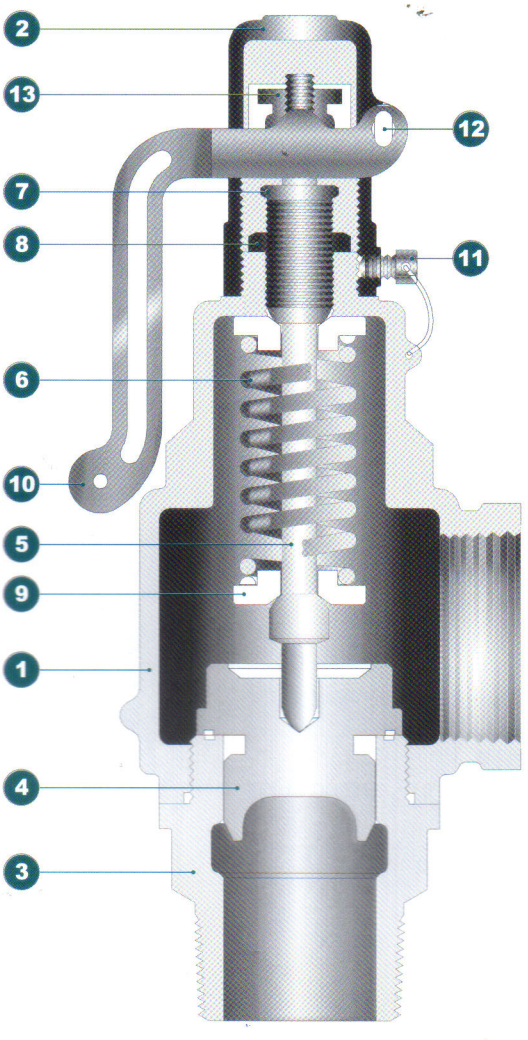

NO	Part Name	Standard Material
1	BODY	BRONZE CAST STEEL STAINLESS STEEL
2	CAP	BRONZE CAST STEEL STAINLESS STEEL
3	SEAT	BRONZE STAINLESS STEEL
4	DISC	BRASS STAINLESS STEEL
5	SPINDLE	BRASS CARBON STEEL STAINLESS STEEL
6	SPRING	CARBON STEEL STAINLESS STEEL
7	ADJUSTING SCREW	BRASS CARBON STEEL STAINLESS STEEL
8	ADJUSTING SCREW NUT	BRASS CARBON STEEL STAINLESS STEEL
9	SPRING GUIDE	BRASS CARBON STEEL STAINLESS STEEL
10	LEVER	BRONZE
11	HEX. BOLT	BRASS
12	PIN	BRASS
13	LIFTING WASHER	BRASS

Bill of Materials

SERIES KST-12 SIZE 40A/50A

This valves are small, compact and high performance valves widely used for small boiler, thermal expansion and the petrochemical industry as well as chemical and general industries and cover the wide pressure range, from low to high, of steam, air and gas, vapor.

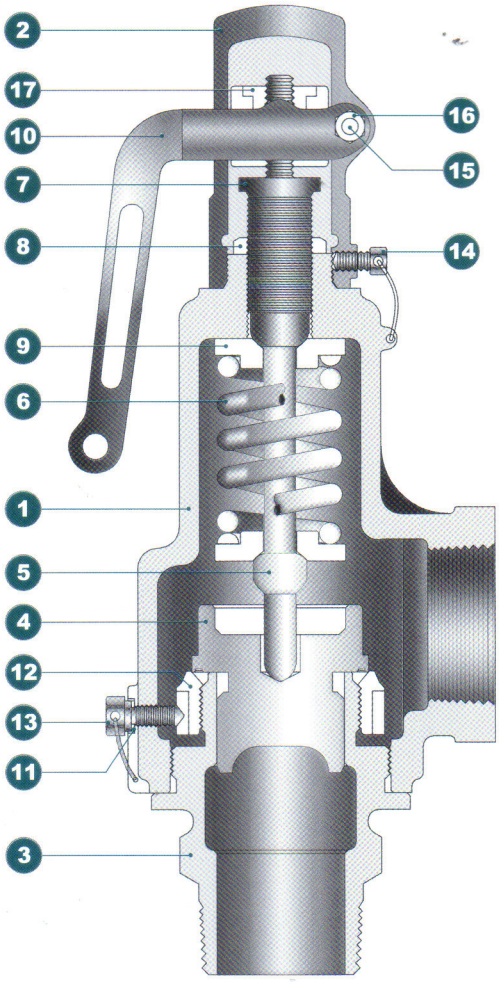

NO	Part Name	Standard Material
1	BODY	DUCTILE CAST STEEL STAINLESS STEEL
2	CAP	BRONZE CAST STEEL STAINLESS STEEL
3	SEAT	BRONZE STAINLESS STEEL
4	DISC	BRASS STAINLESS STEEL
5	SPINDLE	CARBON STEEL STAINLESS STEEL
6	SPRING	CARBON STEEL STAINLESS STEEL
7	ADJUSTING SCREW	BRASS CARBON STEEL STAINLESS STEEL
8	ADJUSTING SCREW NUT	BRASS CARBON STEEL STAINLESS STEEL
9	SPRING GUIDE	BRASS CARBON STEEL STAINLESS STEEL
10	LEVER	BRONZE
11	GASKET	NON-ASBESTOS PTFE GRAPHITE
12	BLOW DOWN RING	BRASS STAINLESS STEEL
13	LOCK BOLT	BRASS CARBON STEEL STAINLESS STEEL
14	HEX. BOLT	BRASS
15	HEX. BOLT	CARBON STEEL
16	NUT	CARBON STEEL
17	LIFTING WASHER	BRASS

KST-11

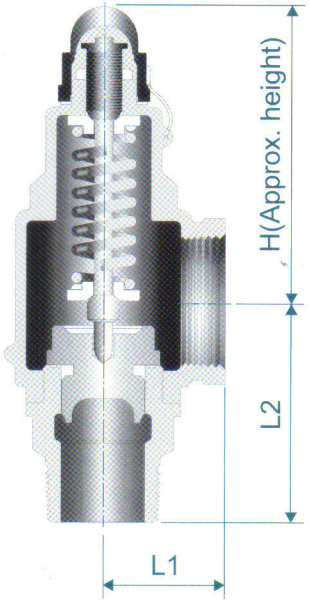

INLET / OUTLET SCREW - PT

LOW LIFT TYPE

(unit : mm)

SIZE Inlet×Outlet	DISCHARGE AREA (mm²)	CENTER TO FACE		APPROX. HEIGHT	APPROX. HEIGHT (kg)
		L1	L2	H	
15A×20A	25.434	34	53	82	0.85
20A×20A	25.434	34	53	82	0.90
25A×25A	45.216	40	65	96	1.25
32A×32A	75.4385	45	78	105	1.70
40A×40A	113.354	64	104	155	3.90
50A×50A	180.864	83	113	192	7.20

Center to face tolerance : ±1.5mm

INLET / OUTLET SCREW - PT or NPT

FULL LIFT TYPE

(unit : mm)

SIZE Inlet×Outlet	ORIFICE AREA (mm²)	CENTER TO FACE		APPROX. HEIGHT	APPROX. HEIGHT (kg)
		L1	L2	H	
15A×20A	78.5	34	53	82	1.10
20A×25A	78.5	40	65	96	1.94
25A×40A	132.665	64	104	155	4.10

Center to face tolerance : ±1.5mm

KST-12

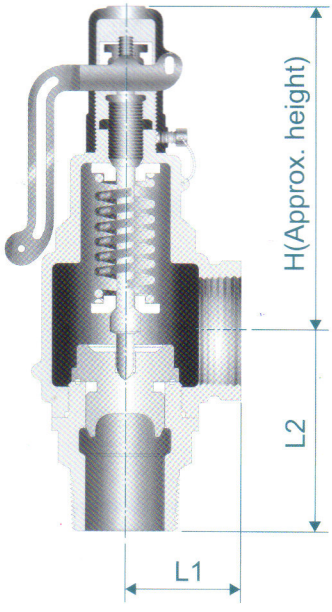

INLET / OUTLET SCREW - PT

LOW LIFT TYPE

(unit : mm)

SIZE Inlet×Outlet	DISCHARGE AREA (mm²)	CENTER TO FACE		APPROX. HEIGHT	APPROX. HEIGHT (kg)
		L1	L2	H	
15A×20A	25.434	34	53	101	0.90
20A×20A	25.434	34	53	101	0.95
25A×25A	45.216	40	65	117	1.30
32A×32A	75.4385	45	78	126	1.90
40A×40A	113.354	64	104	184	4.15
50A×50A	180.864	83	113	221	7.45

Center to face tolerance : ±1.5mm

INLET / OUTLET SCREW - PT or NPT

FULL LIFT TYPE

(unit : mm)

SIZE Inlet×Outlet	ORIFICE AREA (mm²)	CENTER TO FACE		APPROX. HEIGHT	APPROX. HEIGHT (kg)
		L1	L2	H	
15A×20A	78.5	34	53	101	1.10
20A×25A	78.5	40	65	117	1.94
25A×40A	132.665	64	104	184	4.10

Center to face tolerance : ±1.5mm

Standard Valve Selection Table

LOW LIFT TYPE

(unit : mm)

MATERIALS			TYPE	VALVE SIZE	END CONNECTION	
BODY	SEAT & DISC	SPRING		INLET×ORIFICE DIA.×OUTLET	INLET (Male)	OUTLET (Female)
BRONZE CARBON STEEL STAINLESS STEEL (32A and Smaller)	BRONZE & BRASS STAINLESS STEEL	CARBON STEEL STAINLESS STEEL	KST-11 KST-12	15A×12.5×20A 20A×18×25A 25A×24×25A 32A×31×32A	PT	PT
DUCTILE CARBON STEEL STAINLESS STEEL (40A and Larger)	BRONZE & BRASS STAINLESS STEEL	CARBON STEEL STAINLESS STEEL	KST-11 KST-12	40A×38×40A 50A×48×50A	PT	PT

FULL LIFT TYPE

(unit : mm)

MATERIALS			TYPE	VALVE SIZE	END CONNECTION	
BODY	SEAT & DISC	SPRING		INLET×ORIFICE DIA.×OUTLET	INLET (Male)	OUTLET (Female)
CARBON STEEL STAINLESS STEEL (25A and Smaller)	STAINLESS STEEL	CARBON STEEL STAINLESS STEEL	KST-11 KST-12	15A×10×20A 20A×10×25A 25A×13×40A	PT or NPT	PT or NPT

If at particular overpressure the vave attains high lift, the discharge area is established by measurement of the inlet passage at its least diameter. Some safety valves operate at low lift, in which case the controlling flow area is the so-called curtain area. This area is the product of the circumference of the minimum passage through the valve seat and valve lift.

Formulas for the curtain area are :

$A = \pi DL$ (Flat seat)
$= \pi DL \sin\theta$ (Conical seat)
$= \pi/4 \ d_t^2$ (Full lift type)

] Lift type

Where, A : effective discharge area (mm^2)
D : diameter of Disc seat opening (mm)
L : lift (mm)
θ : angle between the discharging part and the valve axis
sin 45° =0.707
d : inside diameter of Disc seat face on the Disc side (mm)
d_t : throat diameter (mm)
d_s: bore of Disc seat face (mm)
d_i : diameter of intake opening for steam or gas (nominal diameter)

In case d_s<d as conical seat

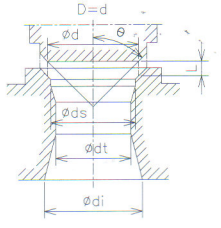

In case d_s>d as conical seat

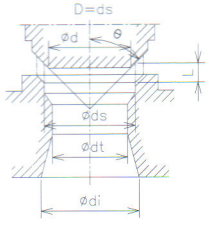

Fig. 1
Effective Discharge Area and Diameter of Disc Seat Opening

Code : KS B 6216 or KOSHA for Steam

$$W = 5.246 \times C \times Kd \times A \times (P+0.1) \times 0.9$$

Nomenclature

W	Capacity of steam, kg/h
A	Effective Discharge Area, mm^2 Low Lift Type : $A = \pi DL$ D = diameter of disc seat (mm) L = lift (mm)
P	For Set Pressure ≤ 0.1MPa P = Set Pressure + 0.02MPa For Set Pressure > 0.1MPa P = Set Pressure × 1.03
Kd	Coefficient of discharge (Fig. 3, page 12)
C	Superheat Correction factor

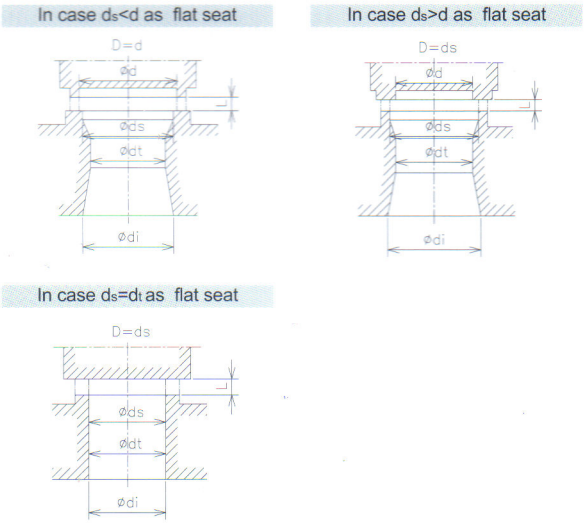

Fig. 2
Effective Discharge Area and Diameter of Disc Seat Opening

Capacity Table of Sat. Steam

LOW LIFT TYPE

(unit : kg/h)

SIZE		15A	20A	25A	32A	40A	50A
Dia. of Disc Seat (mm)		18	18	24	31	38	48
Lift (mm)		0.45	0.45	0.6	0.775	0.95	1.2
0.2	0.02	16.5	16.5	29.3	48.9	73.5	117
0.3	0.029	17.5	17.5	31.2	52.1	78.3	124
0.5	0.049	19.9	19.9	35.4	59.1	88.8	141
0.7	0.069	22.2	22.2	39.6	66.1	99.3	158
0.9	0.088	24.5	24.5	43.6	72.7	109	174
1	0.098	25.7	25.7	45.7	76.2	114	182
1.2	0.118	26.1	26.1	46.4	77.4	116	185
1.5	0.147	29.6	29.6	52.7	87.9	132	210
1.7	0.167	32	32	57	95.1	142	228
2	0.196	35.5	35.5	63.2	105	158	253
2.2	0.216	38	38	67.6	112	169	270
2.5	0.245	41.5	41.5	73.8	123	185	295
2.7	0.265	43.9	43.9	78.1	130	196	312
3	0.294	47.5	47.5	84.4	140	211	337
3.2	0.314	49.9	49.9	88.7	148	222	355
3.5	0.343	53.4	53.4	95	158	238	380
3.7	0.363	55.8	55.8	99.3	165	249	397
4	0.392	59.4	59.4	105	176	264	422
4.2	0.412	61.8	61.8	109	183	275	439
4.5	0.441	65.3	65.3	116	193	291	464
4.7	0.461	67.7	67.7	120	201	302	482
5	0.49	71.3	71.3	126	211	317	507
5.2	0.51	73.7	73.7	131	218	328	524
5.5	0.539	77.2	77.2	137	229	344	549
5.7	0.559	79.6	79.6	141	236	355	566
6	0.588	83.2	83.2	147	246	370	591
6.2	0.608	85.6	85.6	152	254	381	608
6.5	0.637	89.1	89.1	158	264	397	634
6.7	0.657	91.5	91.5	162	271	408	651
6.9	0.676	93.8	93.8	166	278	418	667
7	0.686	95.1	95.1	169	282	423	676
7.2	0.706	97.5	97.5	173	289	434	693
7.5	0.735	101	101	179	299	450	718
7.7	0.755	103	103	183	306	461	735
8	0.784	107	107	190	317	476	761
8.2	0.804	109	109	194	324	487	778
8.5	0.833	112	112	200	335	503	803
8.7	0.853	115	115	205	342	514	820
9	0.882	118	118	211	352	530	845
9.2	0.902	121	121	215	359	540	862
9.5	0.931	124	124	221	370	556	887
9.7	0.951	127	127	226	377	567	905
10	0.98	130	130	232	388	583	930
10.2	1	133	133	236	395	593	947
10.5	1.029	136	136	243	405	609	972
kgf/cm²g	MPag						
Pressure							

Calculation Of Safety & Relief Valve Capacity

Code : KS B 6216 or KOSHA for Air

$$W = \frac{C \times Kd \times A \times P1 \times (M)^{1/2} \times 0.9}{(Z \times T)^{1/2}}$$

Nomenclature

W	Capacity of Air, kg/h
A	Effective Discharge Area, mm^2 Low Lift Type : $A = \pi DL$ D = diameter of disc seat (mm) L = lift (mm)
P1	Upstream relieving pressure absolute, MPa
M	Molecular weight Air=28.96
T	Absolute temperature of gas, K
C	Coefficient determined by ratio of the specific heats of gas
Kd	Coefficient of discharge (Fig. 3, page 12)
Z	Compressibility factor

Figure 3 Coefficient of Discharge Kd

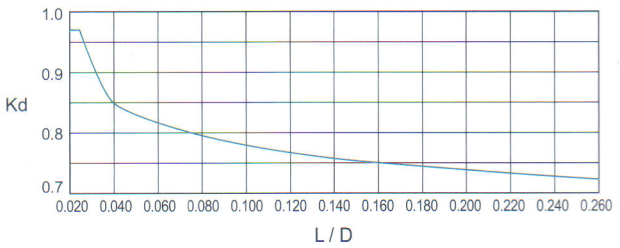

L : lift (mm)
D : diameter of valve seat opening

Capacity Table of Air

LOW LIFT TYPE

(unit : kg/h)

SIZE		15A	20A	25A	32A	40A	50A
Dia. of Disc Seat (mm)		18	18	24	31	38	48
Lift (mm)		0.45	0.45	0.6	0.775	0.95	1.2
0.2	0.02	23.4	23.4	41.7	69.6	104	166
0.3	0.029	25.3	25.3	45	75.2	113	180
0.5	0.049	29.5	29.5	52.5	87.6	131	210
0.7	0.069	33.7	33.7	60	100	150	240
0.9	0.088	37.7	37.7	67	111	168	268
1	0.098	39.8	39.8	70.8	118	177	283
1.2	0.118	44	44	78.2	130	196	313
1.5	0.147	50.1	50.1	89.1	148	223	356
1.7	0.167	54.3	54.3	96.5	161	242	386
2	0.196	60.4	60.4	107	179	269	429
2.2	0.216	64.6	64.6	114	191	287	459
2.5	0.245	70.6	70.6	125	209	315	502
2.7	0.265	74.8	74.8	133	222	333	532
3	0.294	80.9	80.9	143	240	360	575
3.2	0.314	85.1	85.1	151	252	379	605
3.5	0.343	91.2	91.2	162	270	406	648
3.7	0.363	95.4	95.4	169	283	425	678
4	0.392	101	101	180	301	452	722
4.2	0.412	105	105	187	313	471	751
4.5	0.441	111	111	198	331	498	795
4.7	0.461	116	116	206	344	517	825
5	0.49	122	122	217	362	544	868
5.2	0.51	126	126	224	374	562	898
5.5	0.539	132	132	235	392	590	941
5.7	0.559	136	136	242	405	608	971
6	0.588	142	142	253	423	635	1014
6.2	0.608	146	146	261	435	654	1044
6.5	0.637	152	152	271	453	681	1087
6.7	0.657	157	157	279	466	700	1117
6.9	0.676	161	161	286	477	718	1146
7	0.686	163	163	290	484	727	1160
7.2	0.706	167	167	297	496	746	1190
7.5	0.735	173	173	308	514	773	1234
7.7	0.755	177	177	315	527	792	1263
8	0.784	183	183	326	545	819	1307
8.2	0.804	188	188	334	557	837	1337
8.5	0.833	194	194	345	575	865	1380
8.7	0.853	198	198	352	588	883	1410
9	0.882	204	204	363	606	910	1453
9.2	0.902	208	208	370	618	929	1483
9.5	0.931	214	214	381	636	956	1526
9.7	0.951	218	218	389	649	975	1556
9.9	0.97	222	222	396	661	993	1584
10	0.98	224	224	399	667	1002	1599
10.2	1	229	229	407	679	1021	1629
kgf/cm^2g	MPag						
Pressure							

Code : KS B 6216 or KOSHA for Nitrogen

$$W = \frac{C \times Kd \times A \times P1 \times (M)^{1/2} \times 0.9}{(Z \times T)^{1/2}}$$

Nomenclature

W	Capacity of Nitrogen, kg/h
A	Effective Discharge Area, mm^2 Low Lift Type : $A = \pi DL$ D = diameter of disc seat (mm) L = lift (mm)
P1	Upstream relieving pressure absolute, MPa
M	Molecular weight Nitrogen=28
T	absolute temperature of gas, K
C	Coefficient determined by ratio of the specific heats of gas
Kd	Coefficient of discharge (Fig. 3, page 12)
Z	Compressibility factor

Capacity Table of Nitrogen

LOW LIFT TYPE

(unit : kg/h)

SIZE		15A	20A	25A	32A	40A	50A
Dia. of Disc Seat (mm)		18	18	24	31	38	48
Lift (mm)		0.45	0.45	0.6	0.775	0.95	1.2
0.2	0.02	23	23	41	68.4	102	164
0.3	0.029	24.9	24.9	44.3	73.9	111	177
0.5	0.049	29	29	51.6	86.2	129	206
0.7	0.069	33.1	33.1	59	98.4	147	236
0.9	0.088	37.1	37.1	65.9	110	165	263
1	0.098	39.1	39.1	69.6	116	174	278
1.2	0.118	43.3	43.3	76.9	128	192	307
1.5	0.147	49.2	49.2	87.6	146	219	350
1.7	0.167	53.4	53.4	94.9	158	238	379
2	0.196	59.4	59.4	105	176	264	422
2.2	0.216	63.5	63.5	112	188	283	451
2.5	0.245	69.5	69.5	123	206	309	494
2.7	0.265	73.6	73.6	130	218	328	523
3	0.294	79.6	79.6	141	236	354	566
3.2	0.314	83.7	83.7	148	248	373	595
3.5	0.343	89.7	89.7	159	266	399	638
3.7	0.363	93.8	93.8	166	278	418	667
4	0.392	99.8	99.8	177	296	445	710
4.2	0.412	103	103	184	308	463	739
4.5	0.441	109	109	195	326	490	781
4.7	0.461	114	114	202	338	508	811
5	0.49	120	120	213	356	535	853
5.2	0.51	124	124	220	368	553	883
5.5	0.539	130	130	231	386	580	925
5.7	0.559	134	134	238	398	598	955
6	0.588	140	140	249	416	625	997
6.2	0.608	144	144	256	428	643	1027
6.5	0.637	150	150	267	446	670	1069
6.7	0.657	154	154	274	458	688	1098
6.9	0.676	158	158	281	470	706	1126
7	0.686	160	160	285	476	715	1141
7.2	0.706	164	164	292	488	733	1170
7.5	0.735	170	170	303	506	760	1213
7.7	0.755	174	174	310	518	778	1242
8	0.784	180	180	321	536	805	1285
8.2	0.804	184	184	328	548	823	1314
8.5	0.833	190	190	339	566	850	1357
8.7	0.853	194	194	346	578	869	1386
9	0.882	200	200	357	596	895	1429
9.2	0.902	205	205	364	608	914	1458
9.5	0.931	211	211	375	626	940	1501
9.7	0.951	215	215	382	638	959	1530
9.9	0.97	219	219	389	649	976	1558
10	0.98	221	221	393	656	985	1573
10.2	1	225	225	400	668	1004	1602
kgf/cm²g	MPag						
Pressure							

Calculation of Safety & Relief Valve Capacity

Code : HPGCL for Water

$$W = \frac{Kd \times Kw \times Kc \times Kp \times A \times (1.25P\text{-}Pb)^{1/2}}{11.78 \times (G)^{1/2}} \times 60$$

Nomenclature

W	Capacity of Water, kg/h
A	Effective Discharge Area, mm^2 Low Lift Type : $A = \pi DL$ D = diameter of disc seat (mm) L = lift (mm)
Kd	Coefficient of discharge, 0.65
Kp	The factor of overpressure, 0.6 at 10%
P	Set pressure, kPag
G	Specific gravity of water
Kw	Back pressure correction factor
Kv	Viscosity correction factor
Pb	Back pressure, kPag
Kc	Safety Valve 1.0

Capacity Table of Water

LOW LIFT TYPE

(unit : kg/h)

Size		15A	20A	25A	32A	40A	50A
Dia. of Disc Seat (mm)		18	18	24	31	38	48
Lift (mm)		0.45	0.45	0.6	0.775	0.95	1.2
0.2	0.02	252	252	449	749	1125	1796
0.3	0.029	304	304	540	902	1355	2163
0.5	0.049	395	395	702	1172	1762	2811
0.7	0.069	469	469	834	1391	2091	3336
0.9	0.088	529	529	942	1571	2361	3768
1	0.098	559	559	994	1658	2492	3976
1.2	0.118	613	613	1090	1819	2734	4363
1.5	0.147	684	684	1217	2031	3052	4870
1.7	0.167	729	729	1297	2165	3253	5190
2	0.196	790	790	1405	2345	3524	5623
2.2	0.216	830	830	1475	2462	3699	5903
2.5	0.245	884	884	1571	2622	3940	6287
2.7	0.265	919	919	1634	2727	4098	6538
3	0.294	968	968	1721	2872	4316	6887
3.2	0.314	1000	1000	1779	2968	4460	7117
3.5	0.343	1046	1046	1859	3102	4662	7439
3.7	0.363	1076	1076	1913	3192	4796	7652
4	0.392	1118	1118	1988	3317	4984	7952
4.2	0.412	1146	1146	2038	3400	5109	8153
4.5	0.441	1186	1186	2108	3518	5286	8435
4.7	0.461	1212	1212	2156	3597	5405	8624
5	0.49	1250	1250	2222	3708	5572	8891
5.2	0.51	1275	1275	2267	3783	5685	9071
5.5	0.539	1311	1311	2331	3889	5844	9325
5.7	0.559	1335	1335	2374	3961	5952	9496
6	0.588	1369	1369	2435	4062	6104	9740
6.2	0.608	1392	1392	2476	4131	6207	9904
6.5	0.637	1425	1425	2534	4228	6353	10137
6.7	0.657	1447	1447	2573	4294	6452	10295
6.9	0.676	1468	1468	2610	4356	6545	10443
7	0.686	1479	1479	2630	4388	6593	10520
7.2	0.706	1500	1500	2668	4451	6689	10672
7.5	0.735	1531	1531	2722	4542	6825	10889
7.7	0.755	1552	1552	2759	4603	6917	11037
8	0.784	1581	1581	2811	4691	7048	11246
8.2	0.804	1601	1601	2847	4750	7138	11389
8.5	0.833	1630	1630	2898	4835	7265	11593
8.7	0.853	1649	1649	2932	4893	7352	11731
9	0.882	1677	1677	2982	4975	7476	11929
9.2	0.902	1696	1696	3015	5031	7560	12063
9.5	0.931	1723	1723	3064	5112	7681	12256
9.7	0.951	1741	1741	3096	5166	7763	12387
9.9	0.97	1759	1759	3127	5218	7840	12510
10	0.98	1768	1768	3143	5244	7880	12574
10.2	1	1786	1786	3175	5298	7960	12702
kgf/cm^2g	MPag						
Pressure							

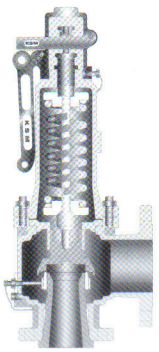

Series KSF-8

Applications : Steam, Air and Gas, Vapor.

Sizes 1/2"×1" to 8"×10" Effective orifice areas from 78.5 to 17662.5mm². Pressures from 0.5 to 300 kgf/cm²g. Temperature range of -29℃ to 425℃.

Materials of construction include Steel body and bonnet with stainless steel trim. The bonnet construction of series KSF-8 opened bonnet(high temperature) or closed bonnet(low temperature). Full nozzle design for ease of maintenance. This series have open lifting lever.

The "D" to "T" orifices meet API standard 526 covering orifice areas and center to face dimensions.

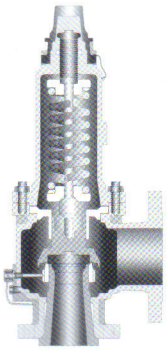

Series KSF-10

Applications : Steam, Air and Gas, Vapor, Water and Liquid.

Sizes 1/2"×1" to 8"×10" Effective orifice areas from 78.5 to 17662.5mm². Pressures from 0.5 to 300 kgf/cm²g. Temperature range of -29℃ to 425℃.

Materials of construction include Steel(Carbon and Stainless) body and bonnet with stainless steel trim. The bonnet construction of series KSF-10 closed bonnet type. Full nozzle design for ease of maintenance. This series have no open lifting lever.

The "D" to "T" orifices meet API standard 526 covering orifice areas and center to face dimensions.

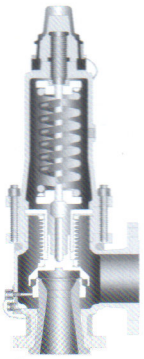

Series KSF for Bellows Type.

Applications : Steam, Air and Gas, Vapor, Water and Liquid.

Sizes 1"×2" to 8"×10" Effective orifice areas from 132.665 to 17662.5mm². Pressures from 0.5 to 30 kgf/cm²g. Temperature range of -29℃ to 425℃.

Optional balanced bellows design isolates working parts and top-worts from fouling or corrosive service, and nullifies the effects of back pressure on valve performance.

Materials of construction include Steel(Carbon and Stainless) body and bonnet with stainless steel trim, also bellows material is 316L stainless steel. The bonnet construction of this series closed bonnet type, bonnet is vent hole. Full nozzle design for ease of maintenance.

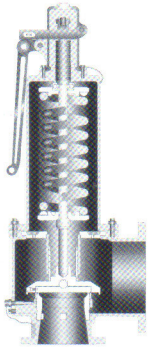

Series KSF for Semi Nozzle Type

Applications : Steam, Air and Gas, Vapor.

Semi nozzle type safty & relief valves with six different nominal(sizes 10V14 through 20B24) have been added to the KSF series, thus making the wider range of sizes available. These valves have been developed to meet the increasing demands for safety relief valves as an overpressure protective device of low pressure plant with large capacity such as an evaporator plant, among our customers. 8T10 was the largest in size before the above extension. Thanks to the development of the larger valves, one single unit of 20B24 safety & relief valve can now relive the required capacity which as much as six units of 8T10 valve can discharge. In other words, such a lager valve is greatly contributory to reduced costs in piping, maintenance, etc.. Water seal type safety & relief valves are also available upon your request. The valve construction of this added series is entirely the same as that of 1D2 to 8T10. However, the standard inlet and outlet connections are for ASME 150 LBS in accordance with the maximum set pressure of 7kgf/cm²g (but 6 kgf/cm²g for 20B24).

Korea Special Metal CO., LTD

58BL 1LOT NAMDONG INDUSTRIAL COMPLEX,
INCHEON, KOREA
TEL : 82. 32. 817. 0101
FAX : 82. 32. 817. 3031
E-mail: ksm@koreaksm.co.kr
Home Page : http://www.koreaksm.co.kr